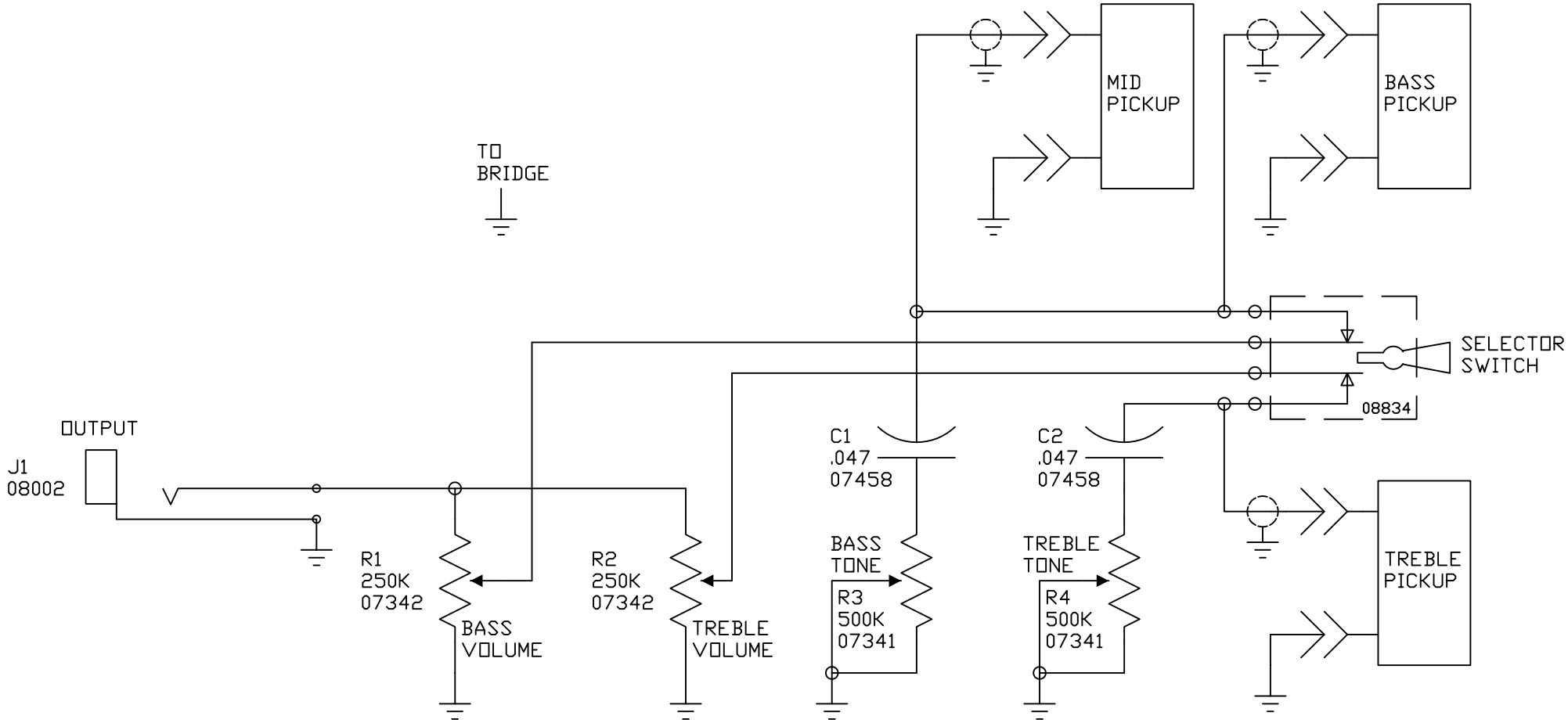

APPLICATION:

325V59

Rickenbacker International Corp.
3895 S. Main Street
Santa Ana, Ca. 92707
Tel: 714-545-5574 Fax: 714-754-0135

SCHEMATIC, GTR MONO 4 CTL 3 PU

SCALE NA	CHECKED BY J. HALL	DRAWN BY K. MASCARENHAS	
DATE 3/22/89			
SIZE A		DRAWING NO 19505	